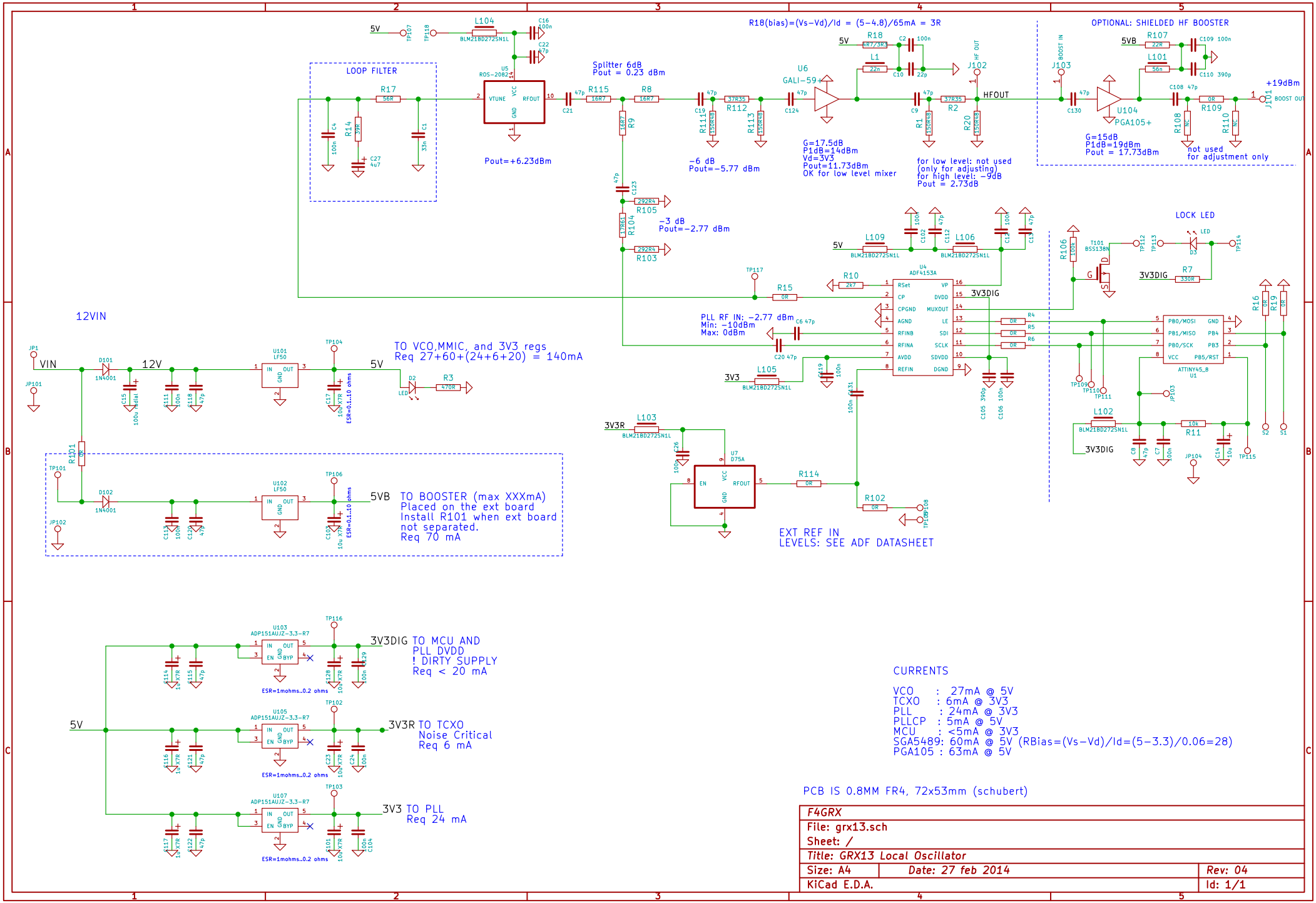
R18(bias)=(Vs-Vd)/Id = (5-4.8)/65mA = 3R
OPTIONAL: SHIELDED HF BOOSTER
LOOP FILTER
Splitter 6dB
Pout = 0.23 dBm
Pout=+6.23dBm
-6 dB
Pout=-5.77 dBm
G=17.5dB
P1dB=14dBm
Vd=3V3
Pout=11.73dBm
OK for low level mixer
for low level: not used
(only for adjusting)
for high level: -9dB
Pout = 2.73dB
G=15dB
P1dB=19dBm
Pout = 17.73dBm
not used
for adjustment only
+19dBm
-3 dB
Pout=-2.77 dBm
LOCK LED
12VIN
TO VCO,MMIC, and 3V3 regs
Req 27+60+(24+6+20) = 140mA
PLL RF IN: -2.77 dBm
Min: -10dBm
Max: 0dBm
TO BOOSTER (max XXXmA)
Placed on the ext board
Install R101 when ext board
not separated.
Req 70 mA
EXT REF IN
LEVELS: SEE ADF DATASHEET
3V3DIG TO MCU AND
PLL DVDD
! DIRTY SUPPLY
Req < 20 mA
3V3R TO TCXO
Noise Critical
Req 6 mA
3V3 TO PLL
Req 24 mA
CURRENTS
VCO : 27mA @ 5V
TCXO : 6mA @ 3V3
PLL : 24mA @ 3V3
PLLCP : 5mA @ 5V
MCU : <5mA @ 3V3
SGA5489: 60mA @ 5V (RBias=(Vs-Vd)/Id=(5-3.3)/0.06=28)
PGA105 : 63mA @ 5V
PCB IS 0.8MM FR4, 72x53mm (schubert)
F4GRX
File: grx13.sch
Sheet: /
Title: GRX13 Local Oscillator
Size: A4
Date: 27 feb 2014
Rev: 04
KiCad E.D.A.
Id: 1/1